McARTHUR II
NOAA
R 330

TABLE OF OFFSETS FOR SIDE BLOCKS INTERVALS GIVEN IN INCREMENTS OF 8'–0							
NO 3 DOCKING POSITION–AFTER SIDE OF NO 3 BLOCK 53'–9 FROM REF PT							
SIDE	BLK NO	FWD OF REF PT	POINT A		POINT B		BEVEL IN 18 FOR A OR B
			HB	HT	HB	HT	
P/S	1	53–9–0	11–9–0	4–5–8	14–3–0	4–10–0	–4 3/16"
P/S	2	61–9–0	16–3–0	3–8–0	18–9–0	4–0–12	–2 11/16"
P/S	3	69–9–0	16–3–0	2–7–8	18–9–0	3–0–4	–1 9/16"
P/S	4	77–9–0	16–3–0	2–1–14	18–9–0	2–6–4	–3/8"
P/S	5	85–9–0	16–3–0	2–0–12	18–9–0	2–5–0	–1/16"
P/S	6	93–9–0	16–3–0	2–0–12	18–9–0	2–5–0	–
P/S	7	101–9–0	16–3–0	2–0–12	18–9–0	2–5–0	–
P/S	8	109–9–0	16–3–0	2–0–12	18–9–0	2–5–0	–
P/S	9	117–9–0	16–0–0	2–0–8	18–6–0	2–5–4	+1/4"
P/S	10	125–9–0	15–9–0	2–2–0	18–3–0	2–6–12	+1/2"
P/S	11	133–9–0	15–6–0	2–4–12	18–0–0	2–9–12	+13/16"
P/S	12	141–9–0	13–5–0	2–5–12	15–11–0	3–0–0	+1 1/16"

TABLE OF OFFSETS FOR SIDE BLOCKS INTERVALS GIVEN IN INCREMENTS OF 8'–0							
NO 2 DOCKING POSITION–AFTER SIDE OF NO 2 BLOCK 57'–9 FROM REF PT							
SIDE	BLK NO	FWD OF REF PT	POINT A		POINT B		BEVEL IN 18 FOR A OR B
			HB	HT	HB	HT	
P/S	1	57–9–0	11–9–0	3–8–0	14–3–0	4–0–8	–3 1/4"
P/S	2	65–9–0	16–3–0	3–0–14	18–9–0	3–5–8	–2 1/4"
P/S	3	73–9–0	16–3–0	2–4–0	18–9–0	2–8–6	–1"
P/S	4	81–9–0	16–3–0	2–1–0	18–9–0	2–5–4	–3/16"
P/S	5	89–9–0	16–3–0	2–0–12	18–9–0	2–5–0	–
P/S	6	97–9–0	16–3–0	2–0–12	18–9–0	2–5–0	–
P/S	7	105–9–0	16–3–0	2–0–12	18–9–0	2–5–0	–
P/S	8	113–9–0	16–3–0	2–0–12	18–9–0	2–5–0	+1/8"
P/S	9	121–9–0	16–0–0	2–1–12	18–6–0	2–6–0	+3/8"
P/S	10	129–9–0	15–9–0	2–3–12	18–3–0	2–8–4	+5/8"
P/S	11	137–9–0	15–6–0	2–6–12	18–0–0	3–0–0	+15/16"
P/S	12	145–9–0	13–5–0	2–9–0	15–11–0	3–3–0	+1 5/16"

TABLE OF OFFSETS FOR SIDE BLOCKS INTERVALS GIVEN IN INCREMENTS OF 8'–0							
NO 1 DOCKING POSITION–AFTER SIDE OF NO 1 BLOCK 55'–9 FROM REF PT							
SIDE	BLK NO	FWD OF REF PT	POINT A		POINT B		BEVEL IN 18 FOR A OR B
			HB	HT	HB	HT	
P/S	1	55–9–0	11–9–0	4–0–8	14–3–0	4–5–0	–3 1/2"
P/S	2	63–9–0	16–3–0	3–4–6	18–9–0	3–9–0	–2 1/2"
P/S	3	71–9–0	16–3–0	2–5–8	18–9–0	2–10–4	–1 7/16"
P/S	4	79–9–0	16–3–0	2–1–6	18–9–0	2–5–12	–5/16"
P/S	5	87–9–0	16–3–0	2–0–12	18–9–0	2–5–0	–
P/S	6	95–9–0	16–3–0	2–0–12	18–9–0	2–5–0	–
P/S	7	103–9–0	16–3–0	2–0–12	18–9–0	2–5–0	–
P/S	8	111–9–0	16–3–0	2–0–12	18–9–0	2–5–0	+1/16"
P/S	9	119–9–0	16–0–0	2–1–4	18–6–0	2–5–8	+5/16"
P/S	10	127–9–0	15–9–0	2–2–12	18–3–0	2–7–4	+9/16"
P/S	11	135–9–0	15–6–0	2–5–12	18–0–0	2–10–12	+7/8"
P/S	12	143–9–0	13–5–0	2–7–0	15–11–0	3–1–0	+1 3/16"

NOTE: DOCKS WHICH HAVE 16'–0" SPACING BEARERS FOR SIDE BLOCKS SHALL USE ODD NUMBERED BLOCKS ONLY.

TABLE OF OFFSETS FOR SIDE BLOCKS INTERVALS GIVEN IN INCREMENTS OF 12'–0							
NO 1 DOCKING POSITION–AFTER SIDE OF NO 1 BLOCK 55'–9 FROM REF PT							
SIDE	BLK NO	FWD OF REF PT	POINT A		POINT B		BEVEL IN 18 FOR A OR B
			HB	HT	HB	HT	
P/S	1	55–9–0	11–9–0	4–0–8	14–3–0	4–5–0	–3 1/2"
P/S	2	67–9–0	16–3–0	2–10–0	18–9–0	3–2–8	–1 15/16"
P/S	3	79–9–0	16–3–0	2–1–6	18–9–0	2–5–12	–5/16"
P/S	4	91–9–0	16–3–0	2–0–12	18–9–0	2–5–0	–
P/S	5	103–9–0	16–3–0	2–0–12	18–9–0	2–5–0	–
P/S	6	115–9–0	16–0–0	2–1–0	18–6–0	2–5–4	+3/16"
P/S	7	127–9–0	15–9–0	2–2–12	18–3–0	2–7–4	+9/16"
P/S	8	139–9–0	13–5–0	2–3–4	15–11–0	2–8–4	+15/16"

TABLE OF OFFSETS FOR SIDE BLOCKS INTERVALS GIVEN IN INCREMENTS OF 12'–0							
NO 2 DOCKING POSITION–AFTER SIDE OF NO 2 BLOCK 57'–9 FROM REF PT							
SIDE	BLK NO	FWD OF REF PT	POINT A		POINT B		BEVEL IN 18 FOR A OR B
			HB	HT	HB	HT	
P/S	1	57–9–0	11–9–0	3–8–0	14–3–0	4–0–8	–3 1/4"
P/S	2	69–9–0	16–3–0	2–7–8	18–9–0	3–0–4	–1 9/16"
P/S	3	81–9–0	16–3–0	2–1–0	18–9–0	2–5–4	–3/16"
P/S	4	93–9–0	16–3–0	2–0–12	18–9–0	2–5–0	–
P/S	5	105–9–0	16–3–0	2–0–12	18–9–0	2–5–0	–
P/S	6	117–9–0	16–0–0	2–0–8	18–6–0	2–5–4	+1/4"
P/S	7	129–9–0	15–9–0	2–3–12	18–3–0	2–8–4	+5/8"
P/S	8	141–9–0	13–5–0	2–5–12	15–11–0	3–0–0	+1 1/16"

TABLE OF OFFSETS FOR SIDE BLOCKS INTERVALS GIVEN IN INCREMENTS OF 12'–0							
NO 3 DOCKING POSITION–AFTER SIDE OF NO31 BLOCK 53'–9 FROM REF PT							
SIDE	BLK NO	FWD OF REF PT	POINT A		POINT B		BEVEL IN 18 FOR A OR B
			HB	HT	HB	HT	
P/S	1	53–9–0	11–9–0	4–5–8	14–3–0	4–10–0	–4 3/16"
P/S	2	65–9–0	16–3–0	3–0–14	18–9–0	3–5–8	–2 1/4"
P/S	3	77–9–0	16–3–0	2–1–14	18–9–0	2–6–4	–3/8"
P/S	4	89–9–0	16–3–0	2–0–12	18–9–0	2–5–0	–
P/S	5	101–9–0	16–3–0	2–0–12	18–9–0	2–5–0	–
P/S	6	113–9–0	16–0–0	2–1–0	18–6–0	2–5–0	+1/8"
P/S	7	125–9–0	15–9–0	2–2–0	18–3–0	2–6–12	+1/2"
P/S	8	137–9–0	13–5–0	2–2–4	15–11–0	2–7–8	+13/16"

BEARING ON BLOCKS

	SUPPORT	BEARING ON SHELL PLATING		
		8'–0" SPACED BEARERS	12'–0" SPACED BEARERS	16'–0" SPACED BEARERS
	SIDE BLOCKS 18" x 30" (TOTAL P/S)	12,960 SQ IN 90 SQ FT	8,640 SQ IN 60 SQ FT	6,480 SQ IN 45 SQ FT
*	KEEL BLOCKS 36" x 42" (25)	25,200 SQ IN 175 SQ FT	25,200 SQ IN 175 SQ FT	25,200 SQ IN 175 SQ FT
	TOTAL BEARING	38,160 SQ IN 265 SQ FT	33,840 SQ IN 235 SQ FT	31,680 SQ IN 220 SQ FT
	BEARING PER SQ IN BLOCKING BEARING PER SQ FT BLOCKING	134.1 LBS 8.62 TONS	151.2 LBS 9.72 TONS	161.6 LBS 10.39 TONS

* NOTE: KEEL BLOCK BEARING AREA BASED ON A 24 INCH WIDTH OF SHOE.
FULL LOAD DISPLACEMENT 2,285 LONG TONS OR 5,118,400 LBS.

LIST OF ALL OPENINGS IN SHELL BELOW DWL

	ITEM NO	SERVICE	SIZE OF HOLE	OUTER PL PROTECTOR RING	SIDE	FWD AFT	FRAME	FWD OF AFT REF POINT	DIST OFF CL SHIP	HEIGHT ABV BOTTOM OF KEEL	REFERENCE
	1	SEA CHEST	16 1/2" x 24 1/2"	–	P	12" FWD	49	109'–6 1/8"	9'–3 5/8"	–	8
	2	SEA CHEST	16 1/2" x 24 1/2"	–	S	12" FWD	49	109'–6 1/8"	13'–5"	–	8
	3	BOW THRUSTER	62" DIA	–	P/S	–	9	188'–6 1/8"	–	68"	6
	4	TRANSDUCER	6" DIA	10 1/4" DIA	S	12" FWD	32	143'–6 1/8"	36"	3"	–
*	5	HYDROPHONE	6 5/8" DIA	–	S	7 1/2" FWD	28	–	–	–	–
*	6	HYDROPHONE	6 5/8" DIA	–	S	7 1/2" FWD	28	–	–	–	–
*	7	TRANSDUCER	18 7/8" DIA	–	S	11 5/8" AFT	25	–	–	–	–
*	8	TRANSDUCER	7 1/8" DIA	–	S	7 1/4" AFT	26	–	–	–	–
*	9	TRANSDUCER	4 3/4" DIA	–	S	7 1/4" AFT	26	–	–	–	–
*	10	TRANSDUCER	2 1/2" DIA	–	S	6 5/8" FWD	27	–	–	–	–
*	11	TRANSDUCER	2 1/2" DIA	–	S	6 5/8" FWD	27	–	–	–	–
*	12	TRANSDUCER	24 5/8" DIA	–	S	–	27	–	–	–	–
*	13	DOPPLER SPEED LOG	17" DIA	–	S	11 5/8" FWD	29	–	–	–	–
*	14	TRANSDUCER	14 1/2" DIA	–	S	11 1/4" AFT	29	–	–	–	–
*	15	TRANSDUCER	14 1/2" DIA	–	S	11 1/4" AFT	29	–	–	–	–
*	16	TRANSDUCER	11" DIA	–	S	11 1/2" AFT	30	–	–	–	–
	17	CABLE TRUNK	10" DIA	12 DIA	S	12" FWD	26	–	–	12"	–
	18	SUCTION PIPE	–	–	–	–	–	–	–	–	–
	19	DISCHARGE PIPE	–	–	P/S	10" FWD	98	–	–	–	–
	20	TRANSDUCER (BLANKED OFF)	–	–	–	–	24 1/2	–	–	–	–
	21	SEA CHEST	–	–	P	–	35/36	–	–	–	–

* NOTE: ITEMS ARE LOCATED IN POD.
THE BOTTOM OF FAIRING IS 19 1/2" BELOW THE BOTTOM OF THE KEEL.

LIST OF DRAIN PLUGS IN SHELL

	NO	SIDE	FWD AFT	FRAME	FWD OF AFT REF POINT	DIST OFF CL SHIP	
	1	S	3" FWD	6	194'–9"	6"	
	2/3	P/S	3" FWD	12	182'–9"	12"	
	4	S	3" FWD	18	170'–9"	15"	
	5	S	3" FWD	24	158'–9"	15"	
	6/7	P/S	3" FWD	24	158'–9"	8'–3"	
B	8	–	–	–	–	–	NOT OBSERVED ON SHIPCHECK FEB 2005. HIDDEN OR NON–EXISTING
	9	S	3" FWD	34	138'–9"	15"	
	10/11	P/S	3" FWD	34	138'–9"	8'–3"	
	12	P	3" FWD	48	110'–9"	8'–3"	
B	13	–	–	–	–	–	NOT OBSERVED ON SHIPCHECK FEB 2005. HIDDEN OR NON–EXISTING
	14	S	3" FWD	52	102'–9"	15"	
B	15	–	–	–	–	–	NOT OBSERVED ON SHIPCHECK FEB 2005. HIDDEN OR NON–EXISTING
	16/17	P/S	3" FWD	60	86'–9"	8'–3"	
	18/19	P/S	3" FWD	60	86'–9"	17'–9"	
	20	S	3" FWD	66	74'–9"	15"	
	21/22	P/S	3" FWD	66	74'–9"	7'–11"	
	23	P	3" FWD	64	78'–9"	17'–9"	
	24	S	3" FWD	66	74'–9"	17'–9 15/16"	
B	25	–	–	–	–	–	NOT OBSERVED ON SHIPCHECK FEB 2005. DOES NOT EXIST
	26/27	P/S	3" AFT	66	74'–3"	7'–11"	
	28	P/S	3" AFT	64	78'–3"	17'–9"	
	29	S	3" AFT	66	74'–3"	17'–9 15/16"	
	30/31	P/S	3" AFT	72	62'–3"	15"	
	32/33	P/S	3" AFT	72	62'–3"	10'–3"	
	34/35	P/S	3" AFT	80	46'–3"	13'–3"	
	36/37	P/S	3" AFT	86	34'–3"	15"	
	38	C	8" AFT	90	25'–10"	0	LOWER SKEG
	39	P	6" AFT	92	22'–0"	11"	UPPER SKEG
	40/41	P/S	12" AFT	92	21'–6"	–	SHAFT TUBE
	42/43	P/S	7" AFT	94	17'–11"	–	SHAFT STRUT BARREL
	44/45	P/S	5 1/2" FWD	98	10'–11 5/8"	RUDDER CL	PORT/STBD RUDDER DRAIN PLUGS
	46/47	P/S	5 1/2" AFT	98	10'– 5/8"	RUDDER CL	PORT/STBD RUDDER DRAIN PLUGS
	48/49	P/S	3" FWD	85	36'–9"	RUDDER CL	SHAFT TUBE
	50/51	P/S	9" AFT	99	7'–9"	RUDDER CL	RUDDER FILL PLUGS
	52/53	P/S	8" FWD	97	11'–10"	RUDDER CL	RUDDER FILL PLUGS

NOTE: ABBREVIATION UTILIZED THROUGHOUT: DP= DRAIN PLUG

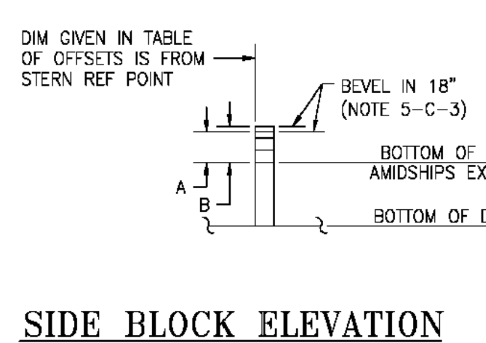

DIM GIVEN IN TABLE OF OFFSETS IS FROM STERN REF POINT
BEVEL IN 18"
BOTTOM OF KEEL AMIDSHIPS EXTENDED
BOTTOM OF DOCK
A
B

SIDE BLOCK ELEVATION

LKG INBD

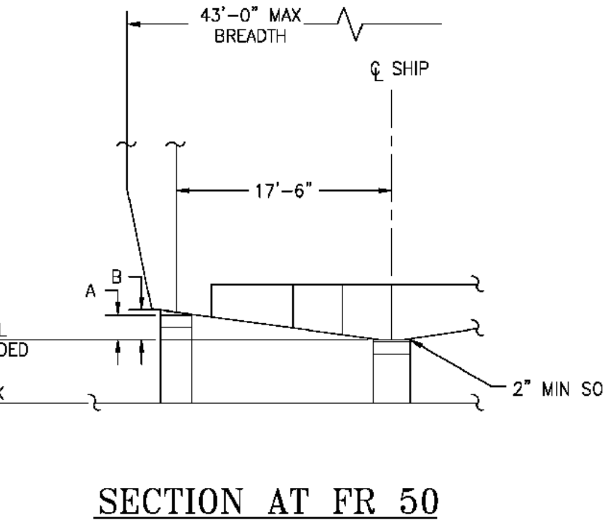

SECTION AT FR 50

LKG AFT

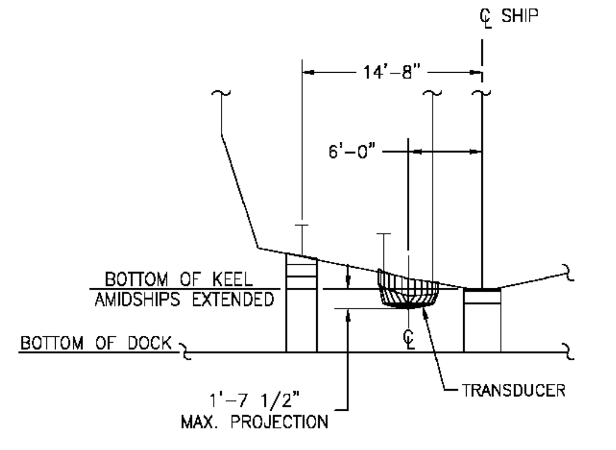

SECTION AT FR 32

LKG AFT

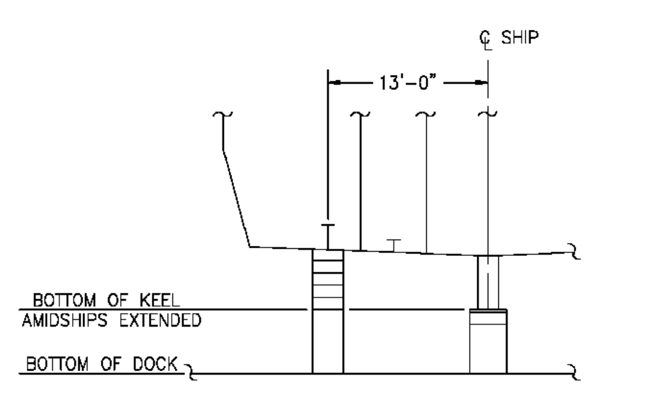

SECTION AT FR 75

LKG AFT

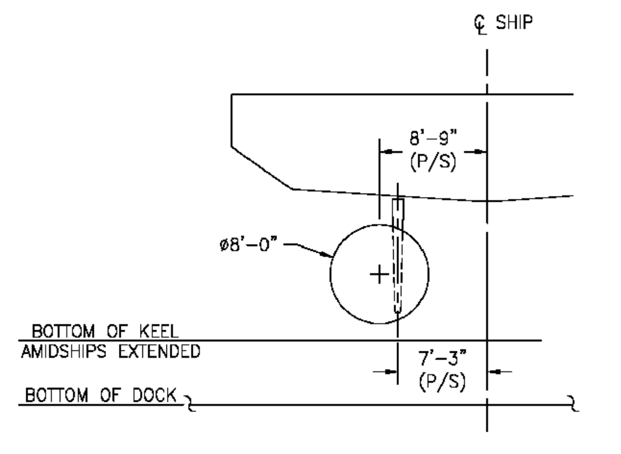

SECTION AT FR 95

LKG AFT

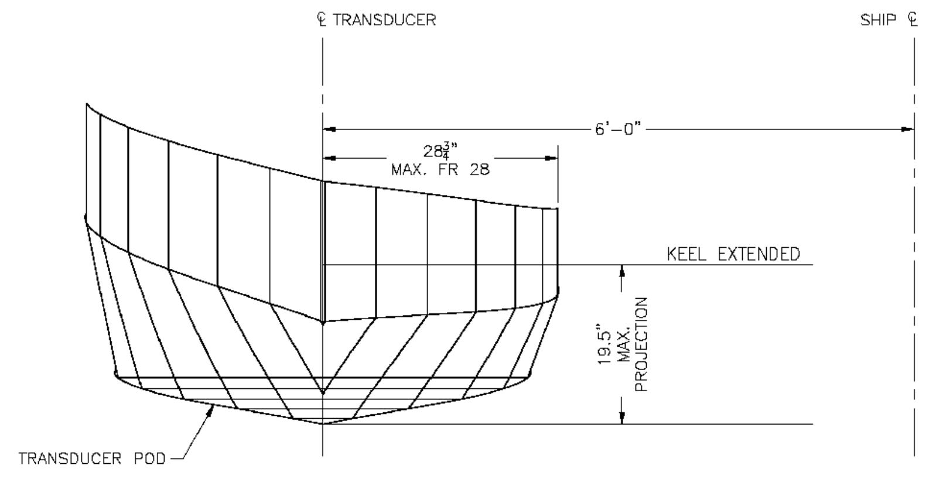

TRANSDUCER POD

STBD LKG AFT

TABLE OF DISPLACEMENT AND OTHER PROPERTIES FOR DOCKING					
	NO CORRECTIONS FOR TRIM				
MEAN DRAFT (FT)	DISPLACEMENT (TONS) S.W.	MOMENT TO CHANGE TRIM ON INCH (FOOT TONS)	LCB AFT OF F.P. (FT)	TONS PER INCH IMMERSION	LONG CENTER OF FLOTATION (FT) AFT OF F.P.
13.0	1,849.59	224.51	98.67	17.58	109.02
13.5	1,955.73	252.28	99.24	17.79	109.52
14.0	2,063.10	260.40	99.79	17.99	110.07
14.5	2,171.63	268.45	100.32	18.19	110.61
15.0	2,281.30	276.13	100.82	18.37	111.08
15.25	2,336.56	280.34	101.07	18.47	111.35
12.0	1,644.51	208.08	97.62	16.60	105.34
12.5	1,745.58	224.68	98.12	17.08	107.01

CRITICAL DIMENSIONS

LENGTH BETWEEN PERPENDICULARS	194'–0"
LENGTH OVERALL	224'–0"
BREADTH (MOLDED)	43'–0"
FRAME SPACING	2'–0"
FIRST SIDE BLOCK IS:	FROM STERN REF POINT
NO 1 DOCKING POSITION	55'–9"
NO 2 DOCKING POSITION	57'–9"
NO 3 DOCKING POSITION	53'–9"
END OF SKEG	24'–11 1/8"

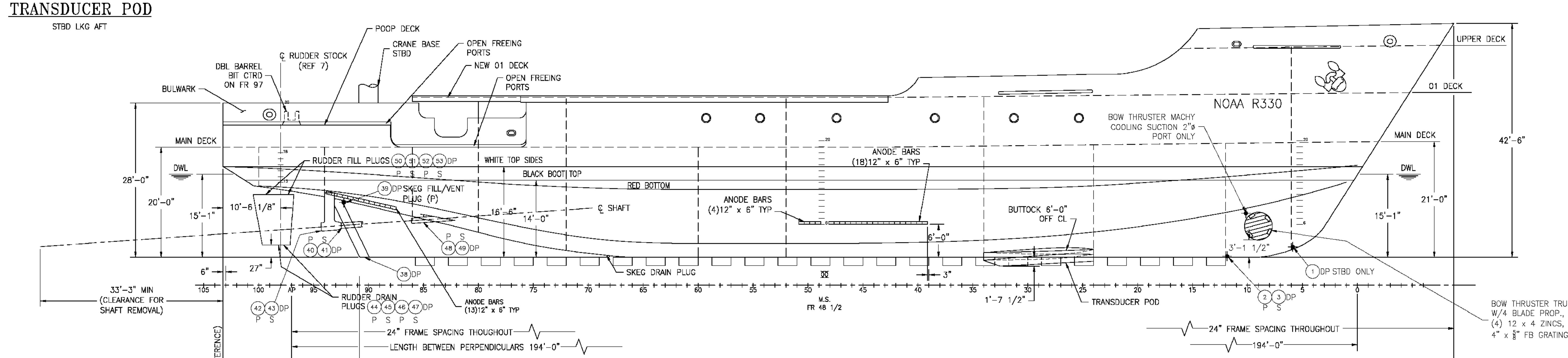

OUTBOARD PROFILE

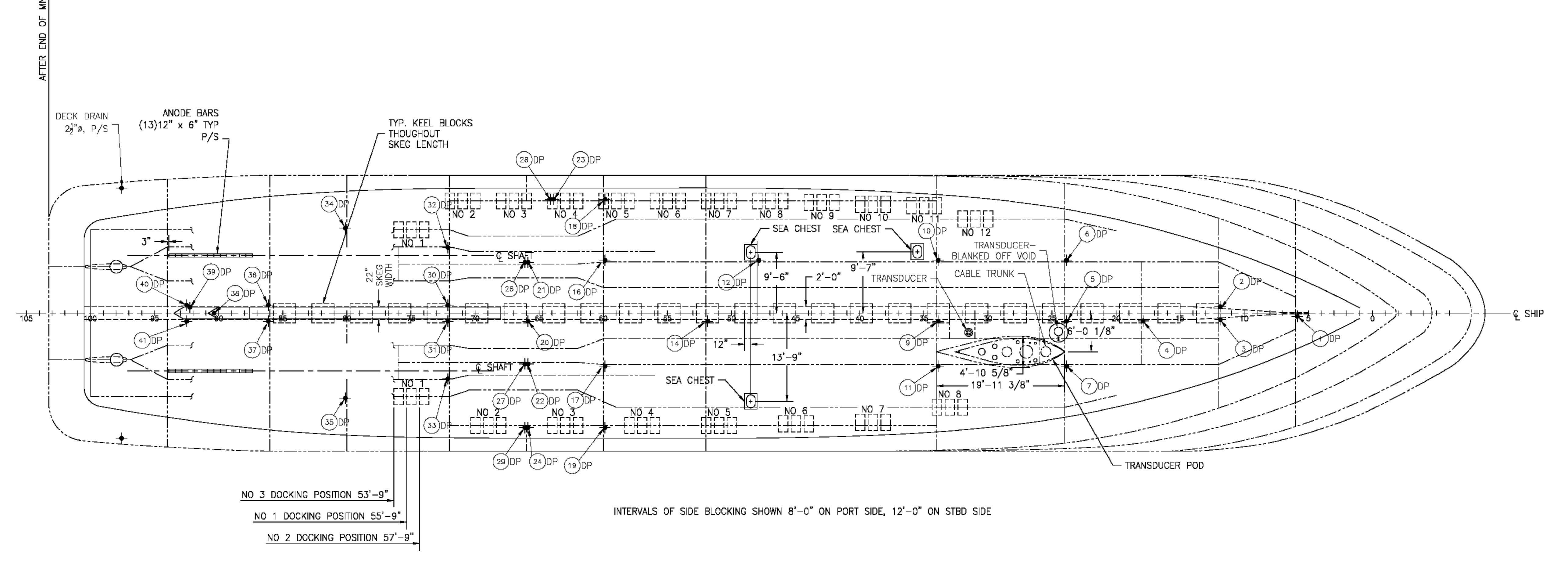

DECK DRAIN P/S
ANODE BARS (13)12" x 6" TYP P/S
TYP. KEEL BLOCKS THROUGHOUT SKEG LENGTH
SEA CHEST
TRANSDUCER
CABLE TRUNK
TRANSDUCER POD
℄ SHIP
NO 3 DOCKING POSITION 53'–9"
NO 1 DOCKING POSITION 55'–9"
NO 2 DOCKING POSITION 57'–9"

INTERVALS OF SIDE BLOCKING SHOWN 8'–0" ON PORT SIDE, 12'–0" ON STBD SIDE

GENERAL NOTES

1. DRAFT MARKS
   (A) ARABIC NUMERALS REPRESENT NAVIGATIONAL DRAFTS AND HEIGHT ABOVE BOTTOM OF FLAT KEEL AMIDSHIPS EXTENDED.

   (B) CORRECTION TO KEEL DRAFT READINGS FOR CALCULATIVE PURPOSES: NONE

2. DIMENSIONS
   (A) LONGITUDINAL LOCATIONS OF ALL ITEMS ARE GIVEN FROM THE STERN REFERENCE POINT (AFTER END OF MAIN DECK AT CENTERLINE).

   (B) HEIGHTS OF ALL ITEMS ARE GIVEN FROM THE BOTTOM OF KEEL AMIDSHIPS EXTENDED.

   (C) LONGITUDINAL LOCATIONS & HEIGHTS OF SIDE BLOCKS ARE TAKEN TO THE AFTER SIDE OF THE BLOCKS.

3. COMPLETE PAINTING OF HULL
   (A) IN ORDER TO CLEAN & PAINT THE ENTIRE BOTTOM OF THE VESSEL IN THREE SUCCESSIVE DOCKINGS THE FOLLOWING POSITIONS OF THE VESSEL ARE NECESSARY:

   (1) POSITION NO 1
   AFTER END OF MAIN DECK (POINT OF REFERENCE) IS PLACED 55'–9 AFT OF AFTER SIDE OF NO 1 SIDE BLOCK.

   (2) POSITION NO 2
   AFTER END OF MAIN DECK (POINT OF REFERENCE) IS PLACED 57'–9 AFT OF AFTER SIDE OF NO 1 SIDE BLOCK.

   (3) POSITION NO 3
   AFTER END OF MAIN DECK (POINT OF REFERENCE) IS PLACED 53'–9 AFT OF AFTER SIDE OF NO 1 SIDE BLOCK.

   (B) REPEAT CYCLE OF POSITIONS. ASCERTAIN FROM VESSEL THE POSITION OF VESSEL AT ITS LAST DOCKING.

4. PROPELLERS AND OTHER APPENDAGES
   (A) IN DETERMINING THE HEIGHT OF KEEL BLOCKS, CARE IS TO BE TAKEN THAT ALL APPENDAGES CLEAR THE BOTTOM OF THE DOCK.

   (B) TRIM BY STERN TABLE OMITTED (PROPELLER BLADES WILL CLEAR BOTTOM OF DOCK SUFFICIENTLY UNDER ALL CONDITIONS OF TRIM).

5. BLOCKING
   (A) THE BLOCKING SHOWN ON THIS PLAN IS THAT REQUIRED FOR BLOCKING UNDER ORDINARY UNDAMAGED CONDITIONS FOR 8'–0, 12'–0, OR 16'–0 SPACED BEARERS IN DRYDOCK.

   (B) KEEL BLOCKS
   (1) KEEL BLOCKS SHALL BE ARRANGED IN PIERS CONSISTING OF THREE 14 x 14 HARD WOOD TIMBERS MOUNTED WITH 2 INCH MINIMUM THICKNESS SOFT WOOD CAP BLOCKS. LONGITUDINAL SPACING TO BE 6'–0 CENTER TO CENTER WITH 30 INCH CLEAR SPAN BETWEEN PIERS.

   (2) NO BLOCKS OR SHORES ARE REQUIRED UNDER ORDINARY CONDITIONS OF DOCKING UNDER THE BOW FORWARD OF FR 12 AND UNDER THE STERN AFT OF FR 84.

   (3) IN THE EVENT THAT PIER BLOCK ARRANGEMENT IS NOT PROVIDED KEEL BLOCKS SHALL BE SPACED 4'–0 CENTER TO CENTER BETWEEN FR 12& FR 84. CRIB BLOCKS UNDER BOW & SKEG FOR ABOUT 12'–0.

   (C) SIDE BLOCKS (SHOWN ON THE PLAN IN ALL THREE DOCKING POSITIONS ARE INDICATED FOR 8'–0 SPACED BEARERS (P) AND 12'–0 SPACED BEARERS (S).

   (1) SIDE BLOCKS SHALL BE LOCATED P & S UNDER LONGITUDINAL BHD AT 17'–6 OFF CENTERLINE AND LONGITUDINAL GIRDERS AT 13'–0 & 14'–8 OFF CENTERLINE AS INDICATED ON TABLE OF OFFSETS IN ACCORDANCE WITH BEARER SPACING OF DOCK.

   (2) SOFT WOOD CAPS ARE REQUIRED.

   (3) DIRECTION OF BEVEL ON BLOCKS IN 18 INCHES IS DOWN (–) OR UP (+) FROM THE HEIGHT GIVEN AT THE AFTER SIDE OF THE BLOCK IN THE TABLES OF OFFSETS.

   (4) THE TABLES OF OFFSETS WILL PERMIT DOCKING FROM PLAN IN DOCKS WHICH HAVE 8'–0, 12'–0, OR 16'–0 BEARER SPACING. BLOCK SPACING OF 12'–0 OR 16'–0 ONLY ARE REQUIRED. WHEN DOCKING VESSELS OFF CENTER IN BLOCKS WHICH HAVE 8'–0 BEARER SPACING IT IS PERMISSIBLE TO STAGGER THE BLOCKS USING ODD ON ONE SIDE AND EVEN ON THE OTHER.

   (5) SIDE BLOCKS ARE NUMBERED FROM AFT FORWARD WITH THE AFTER BLOCK AS NO 1.

   (6) UNIVERSAL CAP SIDE BLOCKS MAY BE USED IN LIEU OF FITTED BLOCKS.

6. DRAIN PLUGS 8, 13, 15 NOT OBSERVED ON TODD SHIPYARD SURVEY FEB. 2005. POSSIBLY HIDDEN.

REVISIONS

REV	SHT	ZONE	ITEM	DESCRIPTION	DATE	APPD
A	1	ALL	1.	REDRAWN IN CADD.	7/04	
	1	ALL	2.	ADDED NEW TRANSDUCER FAIRING FR 24–33.		
B	1	ALL	1.	GENERAL REVISIONS BASED ON HULL SURVEY PERFORMED AT TODD SHIPYARD IN FEB. 2005	8/05	

REFERENCES

NO	TITLE	DRAWING NO
1	LINES & OFFSETS	801–0000001
2	CURVES OF FORM	801–0000002
3	SHELL EXPANSION	111–0000007
4	SKEG	114–0000023
5	SHAFT STRUTS	114–0000024
6	HULL STRUCTURAL FDN	185–0000029
7	RUDDER & RUDDER TRUNK A & D	562–0000030
8	SEA CHESTS	163–0000031
9	MOORING ARRANGEMENT	582–0000109
10	DRAFT MARKS	603–0000129
11	PROPULSION SHAFTING ASSY	243–0000225

NATIONAL OCEANIC AND ATMOSPHERIC ADMINISTRATION
OFFICE OF NOAA CORPS OPERATIONS

ART ANDERSON ASSOCIATES
148 FIRST STREET BREMERTON, WA 98337–1898
(360) 479–5600 FAX 479–5605

TAR–FMP–062–(94)

DSGN L. WINGARD 7/01/04
DWN M. McKAY 7/01/04
CHK L. WINGARD 7/01/04
CHK C. STAEHLI 7/01/04

NOAA APPROVAL

NOAA SHIP McARTHUR II

DOCKING PLAN

SIZE	CAGE CODE	NOAA DRAWING NUMBER	REV
H	0YLJ5	MC–085–002	B
SCALE: 1/8"=1'–0"	CAD FILENAME MC–085–002	SHT 1 OF 1	